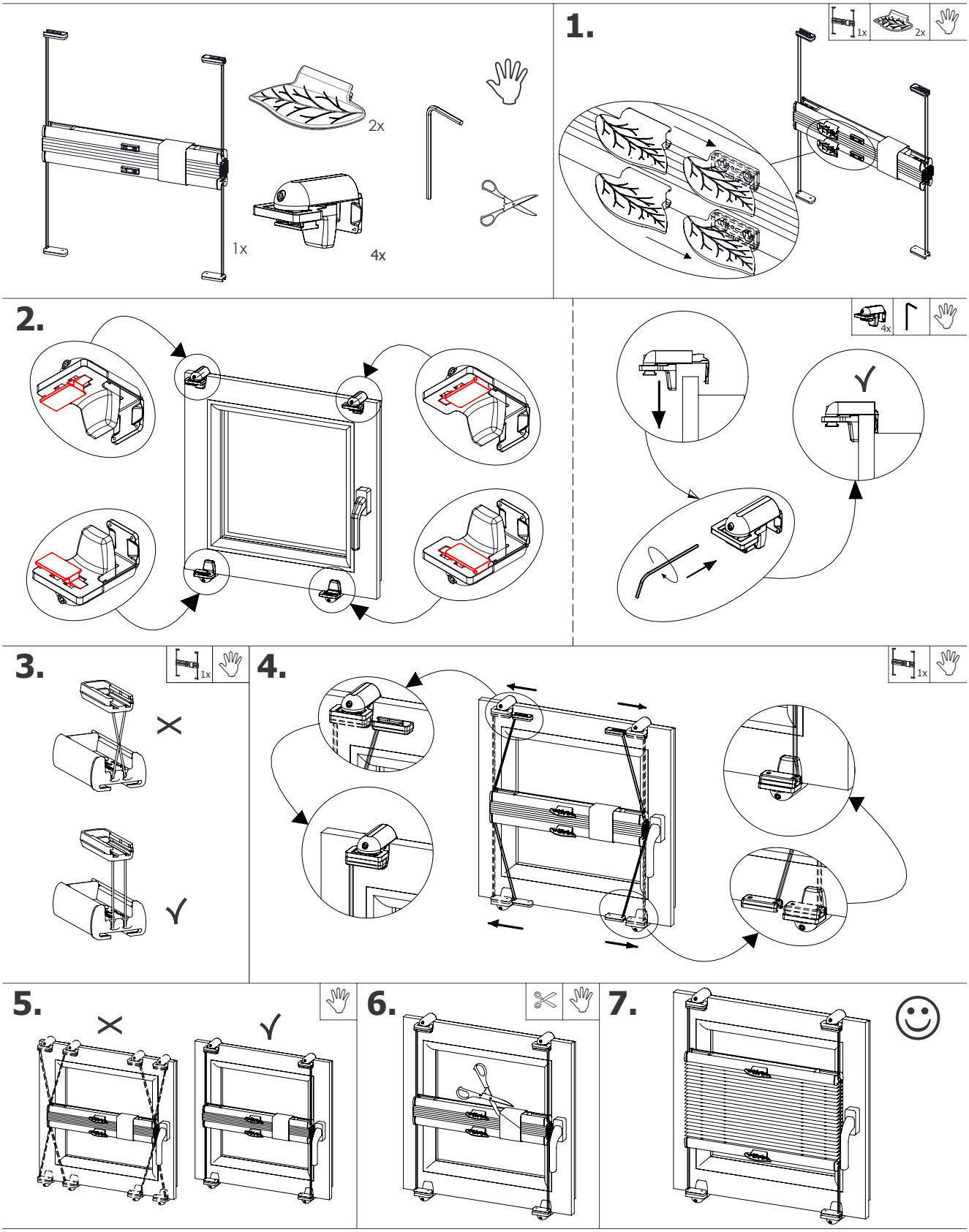QUICKFIT